PRODUCT TECHNICAL SHEET

Collection :	DYNAMIC	Ref. :	**4027.11.71**

Batterie bain-douche 4 trous, avec inverseur et douchette

4-gats bad-douche mengkraan, met omschakelaar en handdouche

4-hole bath and shower mixer, with diverter and handshower

Picture

Product details

Internal mechanism :	Ceramic valve 1/4 turn
Diverter :	Compression seal
Note :	Connecting hoses not included

Technical drawing

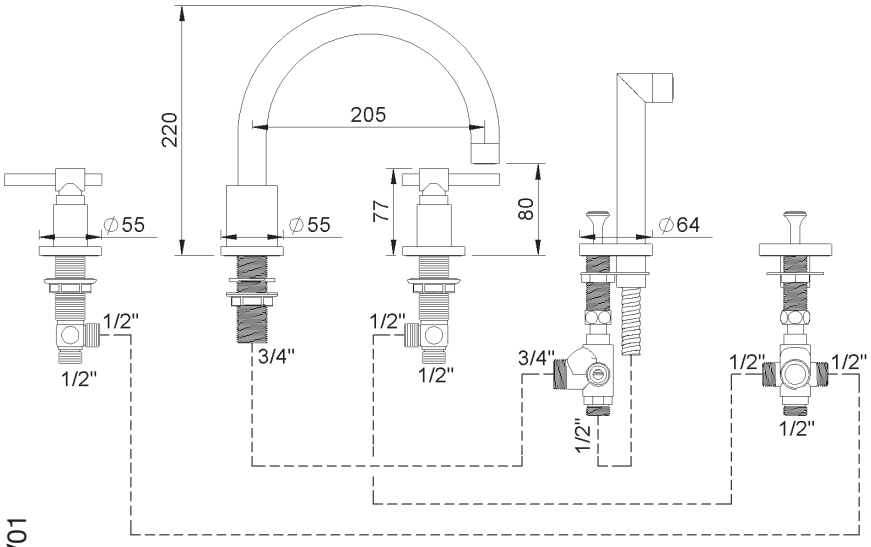

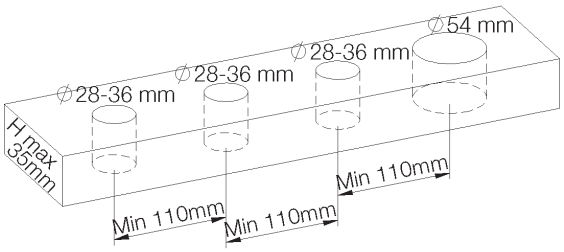

RA1.V01

rvb sa/nv Boulevard Industriel 137 Industrielaan B-1070 Brussels Belgium Tel: +32 2 376 00 30 info@rvb.be www.rvb.be