Innovation since 1935

PRODUCT TECHNICAL SHEET

Collection :	SULLY	Ref. :	4032.11.74

Thermostatique à encastrer

Inbouw thermostaat

Concealed thermostatic

Picture

Product details

Flow at 3 bar :	32 l/min
T° mechanism :	Thermostatic wax cartridge

Technical drawing

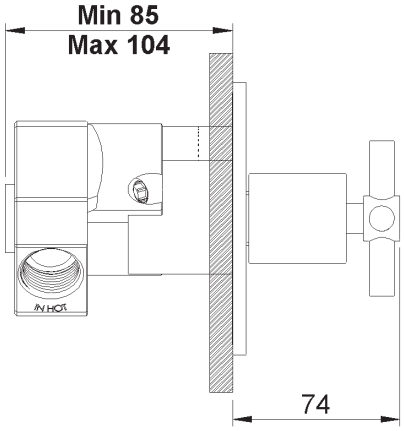

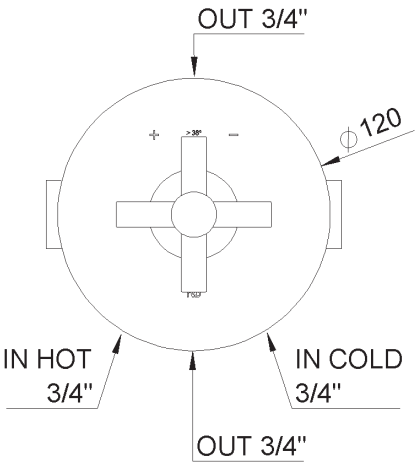

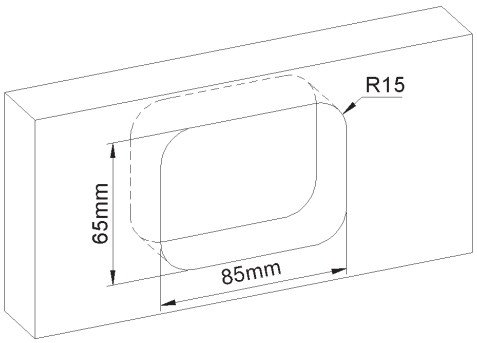

RA1.V01

rvb sa/nv Boulevard Industriel 137 Industrielaan B-1070 Brussels Belgium Tel: +32 2 376 00 30 info@rvb.be www.rvb.be